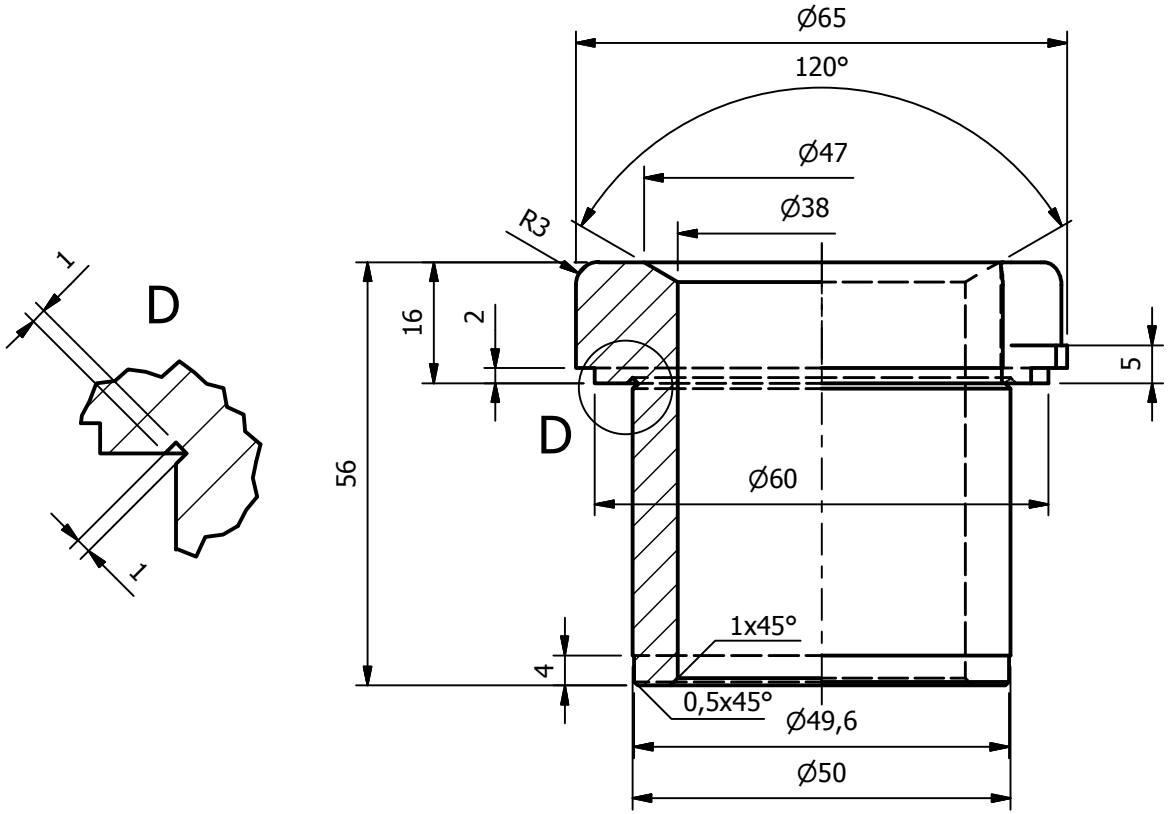

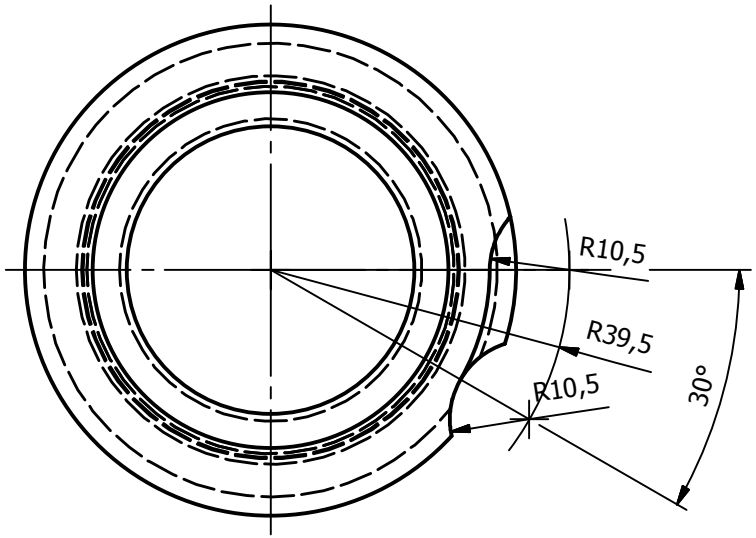

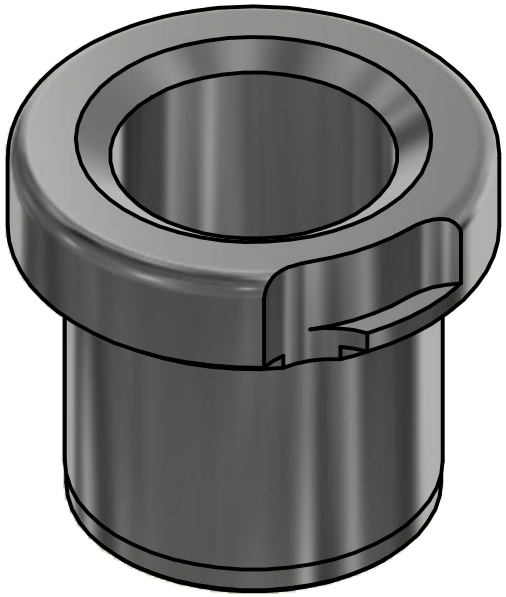

64643.093 mm^3